Paper ID APEN-MIT-2021_162
Applied Energy Symposium: MIT A+B
August 11-13, 2021 • Cambridge, USA

Reinforced Temperature Prognosis of Energy Storage System Based on Two-Node Electrothermal Model and Integrated Long and Short-term Memory Network

Marui Li
College of Electrical Automation and Information Engineering
Tianjin University
Tianjin, China
E-mail: mr944751435@tju.edu.cn

Chaoyu Dong*
College of Electrical Automation and Information Engineering
Tianjin University
Tianjin, China
E-mail: cydong@tju.edu.cn

Qian Xiao
College of Electrical Automation and Information Engineering
Tianjin University
Tianjin, China
E-mail: xiaoqian@tju.edu.cn

Xiaodan Yu
College of Electrical Automation and Information Engineering
Tianjin University
Tianjin, China
E-mail: yuxd@tju.edu.cn

Zhe Wang
Energy Research Institute @NTU
Nanyang Technology University
Singapore, Singapore
E-mail: zhe.wang@ntu.edu.sg

Hongjie Jia
College of Electrical Automation and Information Engineering
Tianjin University
Tianjin, China
E-mail: hjjia@tju.edu.cn

Abstract—As an important part of the energy system, energy storage system, especially with the increasing popularity of renewable energy, has become more and more important. Subsequently, the problems of supervision and control of the energy storage system have become increasingly prominent. Temperature regulation is an important part. Many methods have been proposed to predict the temperature of the battery energy storage system. At present, it is mainly divided into the method based on electrothermal model and the method based on data-driven. In this paper, firstly, a two-node electrothermal model is established. Then an integrated network with dual inputs and dual long and short-term memory networks is established. Finally, the adaptive boosting algorithm is used to modify the prediction results of the surface temperature of the battery energy storage system. The experimental results show that the proposed coupling model is effective and progressive.

Keywords—energy storage system, electrothermal model, long and short memory system, adaptive boosting

I. Introduction

Due to the global warming caused by the excessive use of fossil fuels and the increasing depletion of non-renewable energy, the popularization of clean new energy is imminent. With the use of new energy and electric vehicles, battery energy storage systems have also been widely used. However, temperature-related issues still hinder the further development of battery energy storage systems in the energy storage market [1]. For example, high temperatures will shorten the life of lithium batteries, and poor battery performance at low temperatures. Therefore, it is very important to accurately predict the temperature of the energy storage system, which can help the safe management of the energy storage system.

Many scholars have done a lot of research to predict the temperature of battery energy storage systems. At present, it is mainly divided into model methods and data-driven methods. In literature, many thermal models have been proposed for the thermal management of batteries. Xie et al. established a finite element model for the calculation of heat generation distribution [2]. Pan et al. proposed a pseudo-3D coupled multi-node electro-thermal model for real-time prediction of the heterogeneous temperature field evolution on the surface and inside the battery [3]. In order to reduce the amount of calculation and the difficulty of parameter estimation, Chen et al. proposed a two-node thermal model [4]. However, the model method has some shortcomings. On the one hand, the accuracy of model prediction has a great relationship with the complexity of the model. The more complex the model, the greater the amount of calculation. On the other hand, the accuracy of model parameter identification has a great influence on the performance of the model.

Deep learning has been greatly developed since it was proposed in 2006 and has been applied in various fields. Since deep learning only requires reliable enough data to train an accurate prediction network, it is easy to achieve end-to-end learning. In order to avoid the complexity of the model establishment, many scholars have used deep learning to establish a black box model for lithium battery temperature prediction. Long Short-term Memory network (LSTM) is an excellent recurrent neural network that can process time series and has been widely used. For instance, J Hong et al. used LSTM recurrent neural networks to study a new deep learning method for accurate multi-step voltage prediction of battery systems [5]. Y. Tan and G. Zhao developed a model of transfer learning with long short-term memory network to estimate the state-of-health of lithium-

National Natural Science Foundation of China (U1766210, 51377117, 51625702).

ion batteries [6]. Y. Tian et al. proposed a method combining an LSTM network with an adaptive cubature Kalman filter (ACKF) to achieve accurate and stable SOC estimation [7]. But few scholars combine models and deep learning methods to achieve more accurate temperature prediction.

The work of this paper is as follows. Firstly, a two-node electrothermal model is established. Then we use the least square method to identify the model parameters. The surface temperature of the battery energy storage system at the next sampling point can be predicted by the identified parameters and the noisy measured values of the known sampling points. Secondly, we build an integrated LSTM network with two input layers and use a lot of data to train the network. We divide the real-time measurement data of the battery energy storage system into two types, which are input into two LSTM networks. Finally, A coupling module based on the modified adaptive boosting (MAB) is applied to combining the model method and the integrated LSTM neural network to achieve a more accurate prediction of the surface temperature of the battery energy storage system.

II. Surface Temperature Prediction of Battery Energy Storage System

A. Surface Temperature Prediction Based on Electrothermal Model

Firstly, the two-node electrothermal model of the batteries is established. The battery thermal model is shown in Fig. 1. Here, Q is the heat generation rate of lithium-ion batteries, R_1 and R_2 denote the thermal resistances between the inside and the surface of the battery and between the surface and the environment, respectively, and C_1 and C_2 are the corresponding internal and surface heat capacity of the battery [4]. The preceding parameters of the thermal model vary with the environmental temperature and other factors such as SOC， aging, etc. Finally, T_{in}, T_s, and T_{amb} denote the core, surface temperature of the battery, and the ambient temperature of the environment, respectively. The mathematical expression of heat transfer is as follows:

$$K_1 = \frac{1}{R_1},\quad K_2 = \frac{1}{R_2} \tag{1}$$

$$C_1 * \frac{dT_{in}}{dt} = Q - K_1 * (T_{in} - T_s) \tag{2}$$

$$C_2 * \frac{dT_s}{dt} = K_1 * (T_{in} - T_s) - K_2 * (T_s - T_{amb}) \tag{3}$$

Under a large load current, the heat generation of the battery arises mainly from the ohmic heat, which is proportional to the internal resistance of the battery by

$$Q = R * i^2 \tag{4}$$

i are the battery terminal current, R denotes the internal resistance of the battery. Since the internal resistance of the battery does not vary greatly with SOC, as long as the battery in a limited region ranging from 20% to 80% of the SOC, R is assumed to be a function of the battery's core temperature T_{in} only [8].

$$R = f_R(T_{in}) \tag{5}$$

Applying the following discretization,

$$\frac{dT(k)}{dt} = \frac{z-1}{T_s} * T(k) \tag{6}$$

$$zT(k) = T(k+1) \tag{7}$$

and setting T_s=1, (2) and (3) reduce to

$$\begin{aligned} &C_1 \cdot (T_{in}(k) - T_{in}(k-1)) = \\ &Q(k-1) - K_1 \cdot (T_{in}(k-1) - T_s(k-1)) \end{aligned} \tag{8}$$

$$\begin{aligned} &C_2 \cdot (T_s(k) - T_s(k-1)) = \\ &K_1 \cdot (T_{in}(k-1) - T_s(k-1)) - K_2 (T_s(k-1) - T_{amb}(k-1)) \end{aligned} \tag{9}$$

Then (8) and (9) are combined to eliminate T_{in}. We assume that the ambient temperature is constant.

$$T_s(k) = aT_s(k-1) + bT_s(k-2) + cQ(k-2) + dT_{amb} \tag{10}$$

$$a = 1 - \frac{K_1}{C_1} + \frac{K_1 - K_2}{C_2} \tag{11}$$

$$b = \frac{K_1^2}{C_1 C_2} - 1 + \frac{K_1}{C_1} \tag{12}$$

$$c = \frac{K_1}{C_1 C_2} \tag{13}$$

$$d = \frac{K_1 K_2}{C_1 C_2} \tag{14}$$

Where a, b, c, d are the parameters to be identified

Then recursive least square method (RLS) is used to identify the parameters of the electrothermal model.

More specifically, the data vector $\varphi(k)$, parameter vector θ, and output y of RLS are given by

$$\begin{aligned} &\varphi_1(k) = [T_s(k-1), T_s(k-2), Q(k-2), Tamb]^T \\ &\theta = [a,b,c,d]^T \\ &y = T_s(k) \end{aligned} \tag{15}$$

To minimize the cumulative squared error, RLS formulas are deduced as

$$\begin{cases} \hat{\theta}(k) = \hat{\theta}(k-1) + K(k)[y(k) - \varphi^T(k)\hat{\theta}(k-1)] \\ K(k) = \dfrac{P(k-1)\theta(k)}{1 + \varphi^T(k)P(k-1)\varphi(k)} \\ P(k) = [I - K(k)\varphi^T(k)]P(k-1) \end{cases} \tag{16}$$

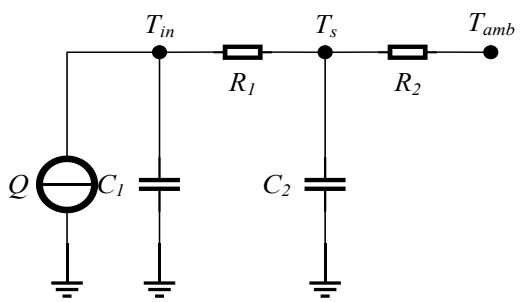

Fig. 1. Battery thermal model

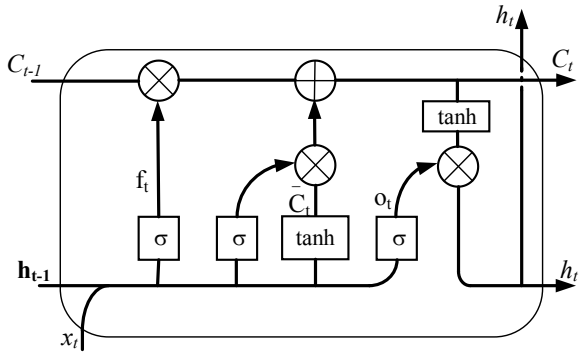

Fig. 2. Structure of Long Short-Term Memory

When the model parameters are identified, we can use (10) to predict the surface temperature of the battery at the next sampling time. In practice, parameter identification and temperature prediction are carried out simultaneously. While updating parameters with RLS, the temperature at the next sampling time is predicted. Here, the signal we import into the model is the measurement signal with noise.

B. Surface Temperature Prediction Based on Integrated Long Short-term Memory Network

LSTM is a special recurrent neural network, which not only solves the problem of gradient explosion and disappearance. during the back-propagation process of RNN, but also overcomes the long-term dependencies of RNN. The standard RNN structure has a chain form of recurrent neural network module. The key to overcoming the long-term dependence of LSTM lies in the addition of cell state. The structure of a recurrent LSTM cell is shown in Fig. 2. x_t, h_t and C_t represent input, output and cell state respectively. The cell state $\mathbf{C_t}$ represents long-term memory. The cell state C_t and output h_t are transitive overtime in an LSTM network. Each LSTM cell is made of input, forget, and output gates [9]. The gate consists of a sigmod neural network layer and a bitwise multiplication operation. The sigmod neural network layer can convert the input signal to a value between 0 and 1, so as to determine how many input signals can pass through. 0 means no signal is allowed to pass, 1 means all signals are allowed to pass. The first stage is the forgetting gate, which determines the information in the cell state at the last moment to be forgotten. The next stage is the input gate, which determines the new information stored in the cell state. Finally, the output gate is determined as the output value. LSTM cells update the cell state and generate the input of the next time through the output of the previous time, the cell state and the current input. The calculation process is shown in (17). W and b represent weight and deviation respectively.

$$\begin{cases} f_t = \sigma(W_f \cdot [h_{t-1}, x_t] + b_f) \\ i_t = \sigma(W_i \cdot [h_{t-1}, x_t] + b_i) \\ \bar{C}_t = \tanh(W_c \cdot [h_{t-1}, x_t] + b_C) \\ C_t = f_t * C_{t-1} + i_t * \bar{C}_t \\ \tanh(x) = \dfrac{e^x - e^{-x}}{e^x + e^{-x}} \\ o_t = \sigma(W_o [h_{t-1}, x_t] + b_0) \\ h_t = o_t * \tanh(C_t) \end{cases} \tag{17}$$

First, the forgetting gate works. The output h_{t-1} of the previous time and the input x_t of the current time are accepted, and the signal f_t is output through the Sigmod layer. Then f_t is a value from 0 to 1, which is multiplied by C_{t-1} to determine the information retained in C_{t-1}. In the input gate, x_t and h_{t-1} are input into the Sigmod layer, and a value i_t between 0 and 1 is output. At the same time, x_t and h_{t-1} create a new state candidate vector $\bar{C}_t$ with values between -1 and 1 through a tanh neural network layer. Then i_t and $\bar{C}_t$ are multiplied to determine which information is added to the cell state $\bar{C}_t$ at the current time. In the output gate, x_t and h_{t-1} are input into Sigmod layer, and a value o_t between 0 and 1 is output. Then the updated cell state Ct is converted to a function between -1 and 1 by a tanh function. The new output is obtained by multiplying o_t and Ct.

Due to the different characteristics of multiple inputs and their effects on the output of the neural network, we divide the unique input of the neural network into two parts by adjusting the weight, deviation and learning rate of the full connection layer. The neural network established in this paper is shown in Figure 3. One input layer connects two fully connected layers. The input is divided into two parts by the fully connected layers with learning rate of 0. The two inputs are then fed into two different integrated LSTM networks. Each integrated LSTM layer consists of two LSTM layers and two dropout layers. Then the two integrated LSTM layers are connected by a concatenation layer, and then the two fully connected layers are connected. The activation function of the fully connected layer containing 32 neurons is tanh, and the activation function of the fully connected layer with 4 neurons is rule. The features of samples are extracted and learned through the integrated LSTM layer, and then mapped to the output through the fully

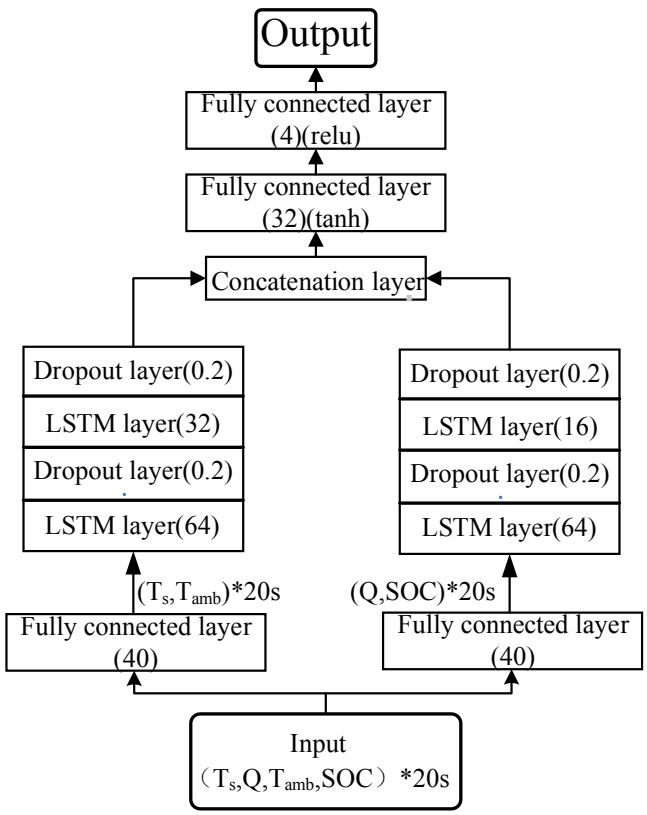

Fig. 3. ILSTM Model

connected layer. The dropout layer connected after the LSTM layer is to prevent overfitting.

The number of neurons in each layer is indicated in brackets in Fig. 3. Because the characteristics of battery temperature, heating and SOC may affect each other and their waveforms are different, these measurements are divided into two inputs in this paper. One input is the surface temperature T_s and ambient temperature T_{amb}, the other input is the Q and SOC. In this paper, the noise measurement signal of 20 consecutive sampling points is used as the input. The output of the neural network is the real surface temperature $T_s(k+1)$ of the battery energy storage system at the next sampling time.

C. *Surface Temperature Prediction Based on Model and Deep Learning Coupling*

Adaptive boosting (AdaBoost) is an iterative algorithm. Its core idea is to train different weak classifiers for the same training set, and then combine these weak classifiers to form a strong classifier. AdaBoost can deal with classification and regression problems. The algorithm is realized by changing the data distribution. It determines the weight of each sample according to whether the classification of each sample in each training set is correct and the accuracy of the last overall classification. The new data set with modified weights are sent to the lower classifier for training. Finally, the classifier obtained from each training is fused as the final decision classifier. The improved AdaBoost can be used to solve the regression problem and the weighted summation is adopted to combine the surface temperature predicted by the two models [10].

Firstly, the regression error rate is calculated by (18).

$$e=\frac{1}{a}\sum_{t=1}^{a}\frac{(\hat{T}_{s,t}-T_{s,t})}{E^2} \tag{18}$$

Here, $\hat{T}_{s,t}$ is the predicted surface temperature of the model at the time t. $T_{s,t}$ is the real surface temperature of the battery energy storage system at the time t. a is the number of samples needed for each update of weight. E is the maximum error in the training set.

$$E=\max\left|\hat{T}_{s,t}-T_{s,t}\right| \tag{19}$$

The weight is then calculated by

$$a=\ln(\frac{1-e}{e}) \tag{20}$$

Then the weights of the model prediction a_{MOD} and the LSTM neural network prediction a_{LSTM} are calculated through (18) and (20) respectively. Then, the weights of model prediction and LSTM prediction are modified by formulas (21) and (22), so that the sum of the two weights is 1.

$$a'_{MOD}=\frac{e^{a_{MOD}}}{e^{a_{LSTM}}+e^{a_{MOD}}} \tag{21}$$

$$a'_{LSTM}=\frac{e^{a_{LSTM}}}{e^{a_{LSTM}}+e^{a_{MOD}}} \tag{22}$$

Finally, the coupled surface temperature $\hat{T}_s$ is predicted by

$$\hat{T}_s=a'_{MOD}\times\hat{T}_{s,MOD}+a'_{LSTM}\times\hat{T}_{s,LSTM} \tag{23}$$

Here, $\hat{T}_{s,MOD}$ and $\hat{T}_{s,LSTM}$ are the surface temperature predicted by the model and LSTM neural network respectively.

This paper uses the data of ten sampling points to calculate the weight, that is, $a = 10$. Then, the predicted value of the surface temperature at the next moment is corrected by (23). The weights of model prediction and LSTM prediction are continuously updated by sliding window method, and the surface temperature is predicted while updating the weights.

III. Experimental Result

A. *Electrothermal Model Prediction Results*

In order to make the model have a better prediction effect, this paper first applies the recursive least square method to the data of the first 100 seconds, and obtains a better initial value of the model parameters. Then, the updated model parameters are obtained by (16), and the surface temperature of the battery energy storage system at the next sampling time is predicted by (10). The surface temperature predicted by the model is shown in Fig. 4.

From Fig. 4 (a), we can find that the trend of the surface temperature of the battery energy storage system predicted by the model method is roughly the same as the real surface temperature, but its value is slightly lower than the real value.It can be seen from (b) that the deviation between the predicted temperature and the real value will increase

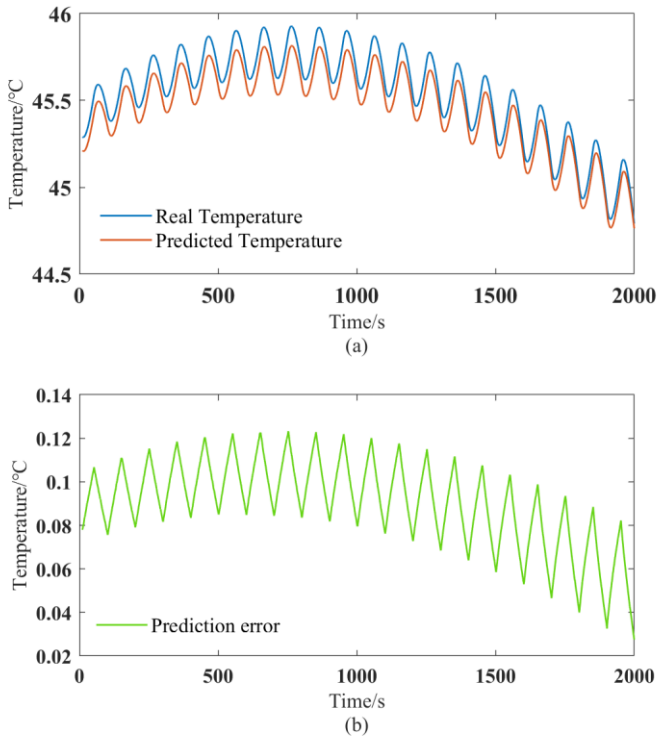

Fig. 4. Results of Surface Temperature Predicted by The Model

slightly with the increase of temperature. When the surface temperature is the highest, the temperature deviation is also the largest.

B. LSTM Network Prediction Results

There are many hyperparameters in the LSTM model. This paper uses MATLAB to train the network. In this paper, we change the training parameters of the network and test many experiments. We choose the training parameters to make the network prediction best. Finally, This paper sets InitialLearnRate = 0.001, LearnRateDropPeriod = 400, LearnRateDropFactor = 0.2, MaxEpochs = 550, and uses the Adam as the optimizer to train the network. In this paper, a data set of 16000s' is generated. The period of 12099s is used as the training set, the rest is used as the verification set and prediction set. The proportion among the training, verification, and prediction is 6:1:1. The changes of RMSE and loss in the network training process are shown in Fig. 5. Finally, an integrated LSTM network with two input layers is formulated to predict the change of surface temperature obtained.

The method of sliding window is used to input the 20s measurement data set into the trained LSTM neural network, and the prediction results are shown in Fig. 6. Fig. 6 (a) shows that the waveform of the surface temperature of the battery energy storage system predicted by the LSTM neural network with two input layers is slightly worse. But it's better to keep track of the real temperature. From Figure 6 (b), we can find that there are some large deviations between the LSTM network predicted temperature and the real temperature at some points. But on the whole, the deviation of prediction has a downward trend.

C. Prediction Results of Coupling between Electrothermal Model and LSTM

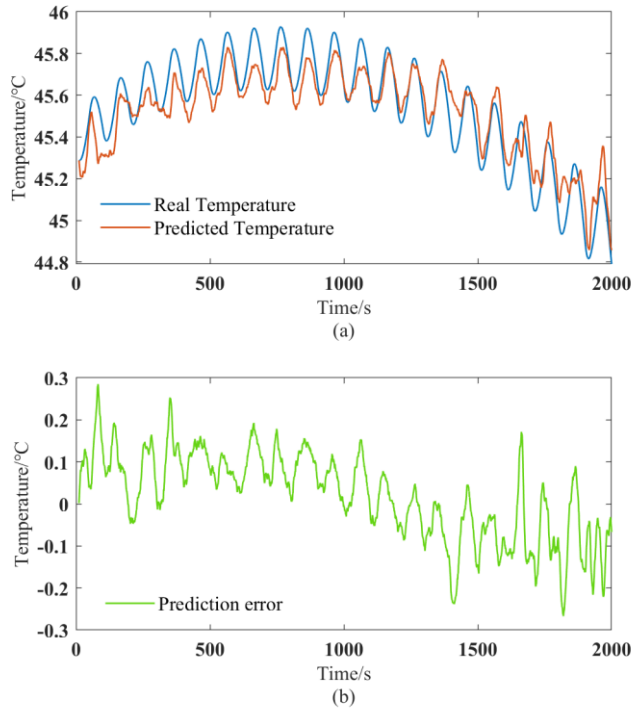

Fig. 6. Results of Surface Temperature Predicted by LSTM Network

Firstly, the weight of electrothermal model prediction and LSTM prediction is calculated through the data set of 10 s, and then the surface temperature predicted by them at the next time is modified by (23). The prediction results of surface temperature corrected by the AdaBoost method are shown in Fig. 7. A comparison of the prediction results of the three methods is shown in Fig. 8. And Table I calculates the

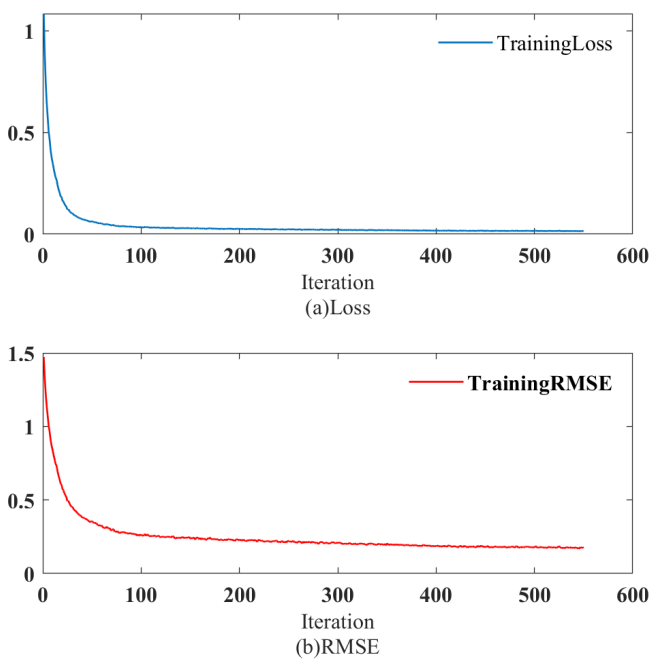

Fig. 5. Training Process

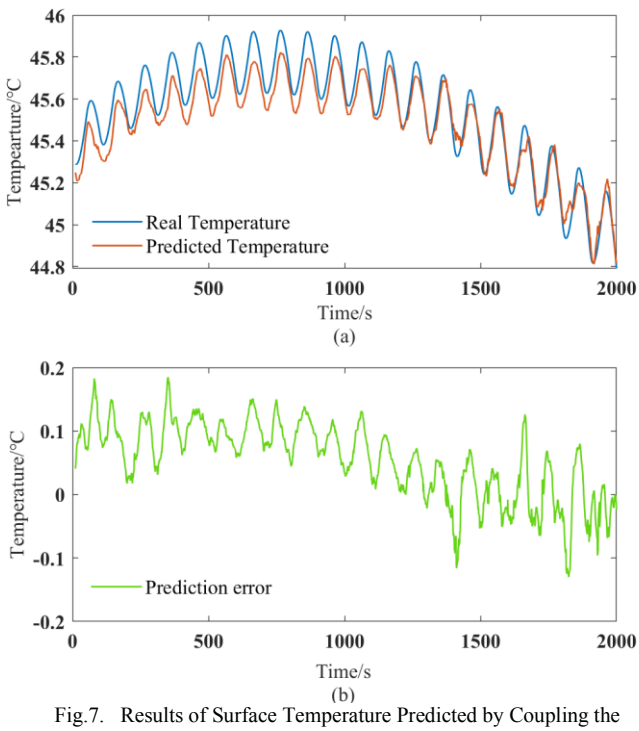

Fig.7. Results of Surface Temperature Predicted by Coupling the Electrothermal Model with LSTM

MSE of the three methods。

Fig. 7 shows that the predicted value of surface temperature corrected by AdaBoost method not only has a good waveform, but also can better track the change of real temperature. And it can be seen that AdaBoost method can reduce the error between the predicted value and the real value of the surface temperature of battery energy storage system.

It can be seen from figure 8 that AdaBoost method combines the advantages of electrothermal model prediction and LSTM network prediction. It not only corrects the weak tracking ability of the model method, but also reduces the deviation of the LSTM method at some points. Moreover, Table I shows that the prediction result modified by the AdaBoost method has a smaller MSE than that of the single electrothermal model or LSTM method.

TABLE I. MSE OF THREE PREDICTION METHODS

Method	***Electrothermal Model***	***LSTM***	***Proposed Prognosis Approach***
MSE	0.0085	0.0109	0.0065

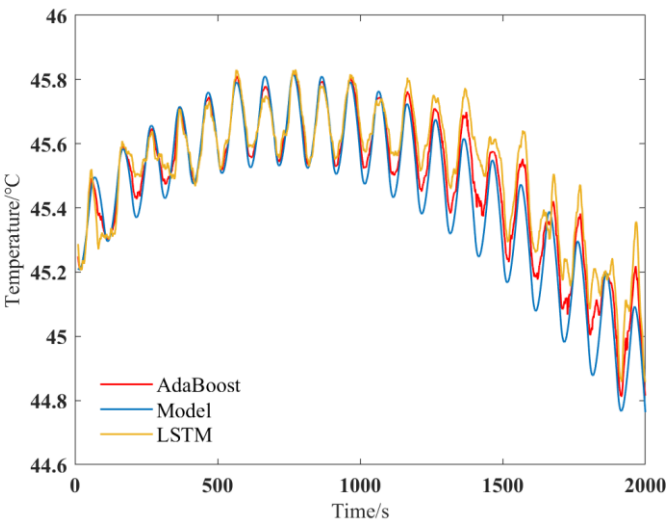

Fig.8. Comparison of Three Prediction Methods

IV. CONCLUSION

In this paper, firstly, a two-node electrothermal model is established. The parameters of the model are identified by the least square method, and then the model is used for prediction. Then an integrated neural network with two input layers and two LSTM networks is established to predict the surface temperature of the battery energy storage system. Finally, we use the AdaBoost method to modify the prediction of the two methods and get better prediction results. From the perspective of waveform, it can be seen that the prediction results modified by AdaBoost method combine the advantages of electrothermal model and LSTM network. Moreover, the proposed coupling model provides a better prediction for surface temperature of battery energy storage system in an MSE sense. Compared with the method of the electrothermal model, the MSE of the result predicted by the coupled model is reduced by 23%; compared with the method of the LSTM model, the MSE of the predicted result of the coupled model is reduced by 40%.

REFERENCES

[1] B. Fan, C. Lin, F. Wang, S. Liu, L. Liu, and S. Xu, “An Adaptive Neuro-Fuzzy Inference System (ANFIS) Based Model for the Temperature Prediction of Lithium-Ion Power Batteries,” SAE Int. J. Passeng. Cars - Electron. Electr. Syst., vol. 12, no. 1, pp. 07-12-01–0001, Aug. 2018, doi: 10.4271/07-12-01-0001.

[2] Y. Xie *et al.*, “A novel electro-thermal coupled model of lithium-ion pouch battery covering heat generation distribution and tab thermal behaviours,” Int J Energy Res, vol. 44, no. 14, pp. 11725–11741, Nov. 2020, doi: 10.1002/er.5803.

[3] Y. Pan *et al.*, “A computational multi-node electro-thermal model for large prismatic lithium-ion batteries,” Journal of Power Sources, vol. 459, p. 228070, May 2020, doi: 10.1016/j.jpowsour.2020.228070.

[4] L. Chen *et al.*, “Core temperature estimation based on electro-thermal model of lithium-ion batteries,” Int J Energy Res, vol. 44, no. 7, pp. 5320–5333, Jun. 2020, doi: 10.1002/er.5281.

[5] J. Hong, Z. Wang, and Y. Yao, “Fault prognosis of battery system based on accurate voltage abnormity prognosis using long short-term memory neural networks,” Applied Energy, vol. 251, p. 113381, Oct. 2019, doi: 10.1016/j.apenergy.2019.113381.

[6] Y. Tan and G. Zhao, “Transfer Learning With Long Short-Term Memory Network for State-of-Health Prediction of Lithium-Ion Batteries,” IEEE Trans. Ind. Electron., vol. 67, no. 10, pp. 8723–8731, Oct. 2020, doi: 10.1109/TIE.2019.2946551.

[7] Y. Tian, R. Lai, X. Li, L. Xiang, and J. Tian, “A combined method for state-of-charge estimation for lithium-ion batteries using a long short-term memory network and an adaptive cubature Kalman filter,” Applied Energy, vol. 265, p. 114789, May 2020, doi: 10.1016/j.apenergy.2020.114789.

[8] C. Zhang, K. Li, and J. Deng, “Real-time estimation of battery internal temperature based on a simplified thermoelectric model,” *Journal of Power Sources*, vol. 302, pp. 146–154, Jan. 2016, doi: 10.1016/j.jpowsour.2015.10.052.

[9] C. Li, F. Xiao, Y. Fan, G. Yang and W. Zhang, "A Recurrent Neural Network with Long Short-Term Memory for State of Charge Estimation of Lithium-ion Batteries," 2019 IEEE 8th Joint International Information Technology and Artificial Intelligence Conference (ITAIC), Chongqing, China, 2019, pp. 1712-1716, doi: 10.1109/ITAIC.2019.

[10] D. Li, Z. Zhang, P. Liu, Z. Wang, and L. Zhang, “Battery Fault Diagnosis for Electric Vehicles Based on Voltage Abnormality by Combining the Long Short-Term Memory Neural Network and the Equivalent Circuit Model,” IEEE Trans. Power Electron., vol. 36, no. 2, pp. 1303–1315, Feb. 2021, doi: 10.1109/TPEL.2020.3008194.